Hillmar
Hillmar Industries Ltd.
7371 Vantage Way
Delta, BC V4G 1C9
P:604 946-7115 F:604 946-0329
info@hillmar.com www.hillmar.com

COUPLING RKMWD
RKMWD-120-LSH-0315-20-1050
SPECIFICATION SHEET
SLS & MKTG
ENGLISH

Sheet Number:			
Job Number:			
Form Number: 429-690-76549PT			
Company / Project Reference:	Date.:	Page.: 1 OF 1	Document Package No.:	Rev.:

Inventor Drawing

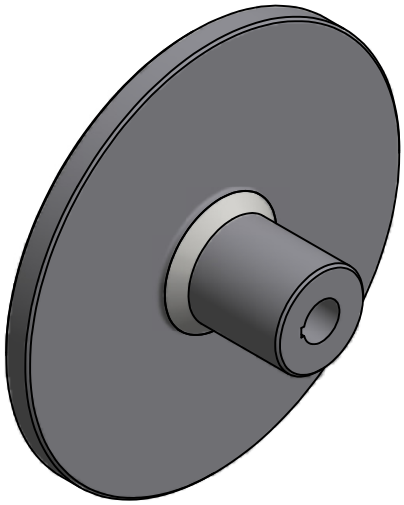

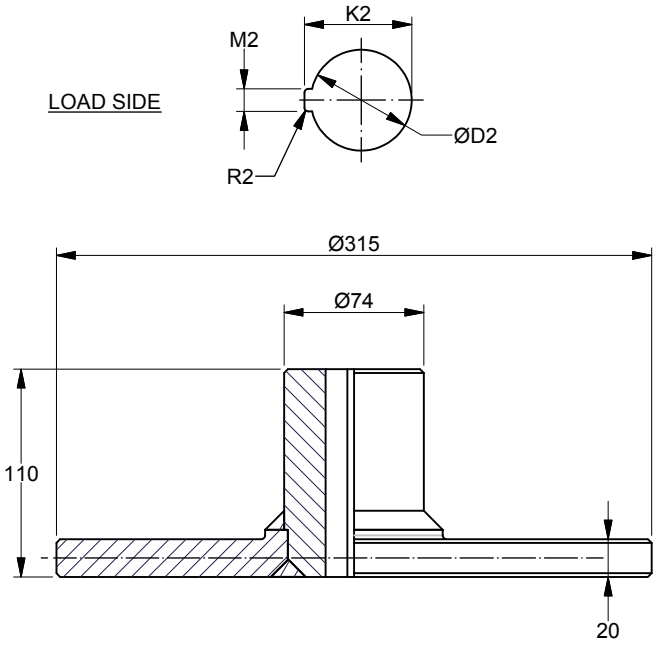

FEATURE	CODE
Rigid coupling	RKMWD
Coupling size (Hub OD)	120
Load side	LSH
Disc diameter (mm)	0315
Disc thickness (mm)	20
Maximum coupling torque (Nm)	1050

Example for ordering	RKMWD-120-LSH-0315-20-1050

TECHNICAL DATA

Disc model	SDWD-0315-20
Disc diameter (mm)	315
Hub bore size MIN. (mm)	30
D2 MAX. (mm)	48
Moment of inertia (kgm^2)	0.153
MAX. coupling torque TkMAX (Nm)	1050
MAX. coupling speed (RPM)	2380
Weight (kg)	14.3

CUSTOMER SPECIFICATIONS

Load side
D2:_____mm
M2:_____mm
K2:_____mm
R2:_____mm
C2:_____mm

NOTES

Coupling balancing grade ISO 1940-G6.3 is guaranteed for all coupling parts.

All figures are nominal figures only

All dimensions are in millimeters

Document Template #710-101-62058

** ALL TECHNICAL DATA IS SUBJECT TO CHANGE WITHOUT NOTICE **
Hillmar works have a fully registered ISO 9001-2008 quality assurance programme (QCB #01-1525)

C:\TEMP\a3f49bb3-e10c-4cd0-aed8-26c1c4c1b337\80000528407\HILLMAR\HILLMAR PRODUCTION\04 THRUSTER DB\0700-4\07004005 PKM-GKM-RKSM-RKX\SPC-SHT-PKM-GKM-RKSM-RKX\04 RKX\76549 RKMWD-120-LSH-0315-20-1050.idw